1 Wire Airflow/Humidity/Pressure sensor

Connectors, regulator and ADC

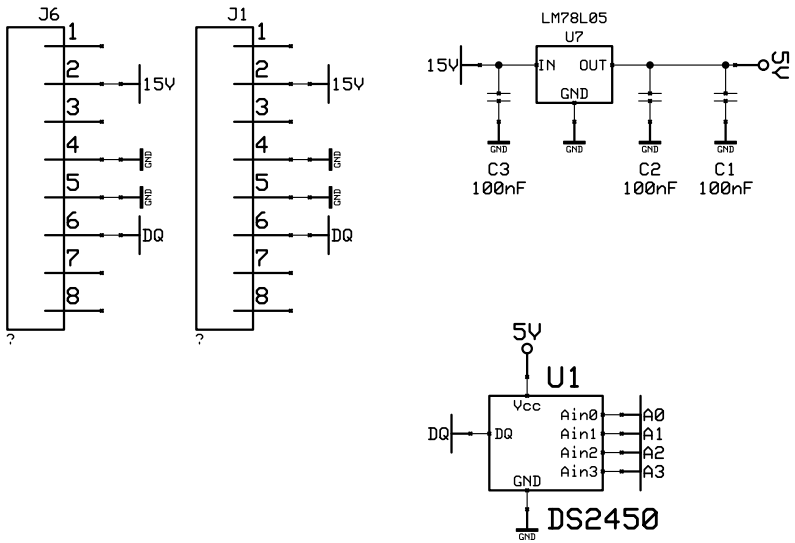

Prelim airflow sensor. Hotwire method. Not complete!

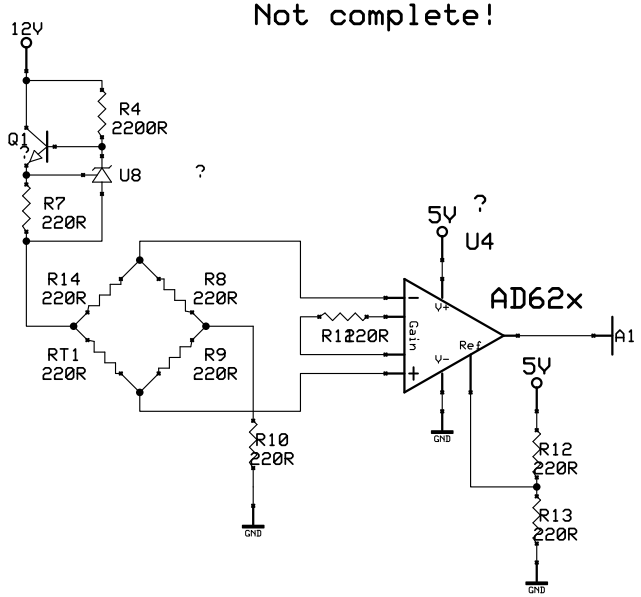

Humidity

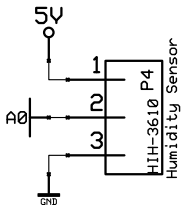

Temp option1 (brute force)

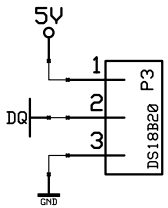

Temp option2 (cheap, fast, 0.5C absolute)

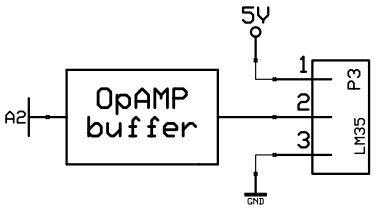
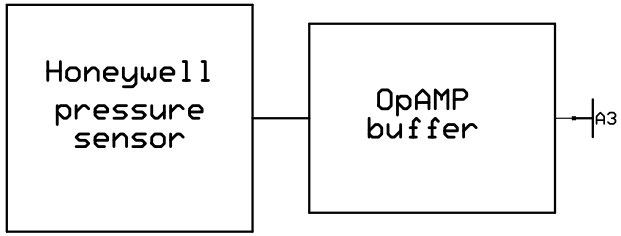
Pressure